cut view A-A

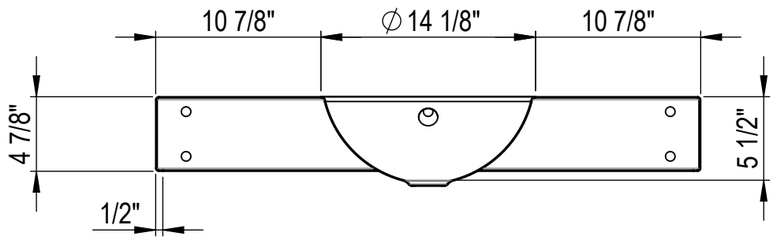

cut view B-B

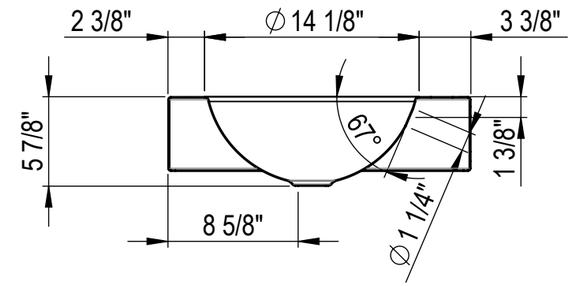

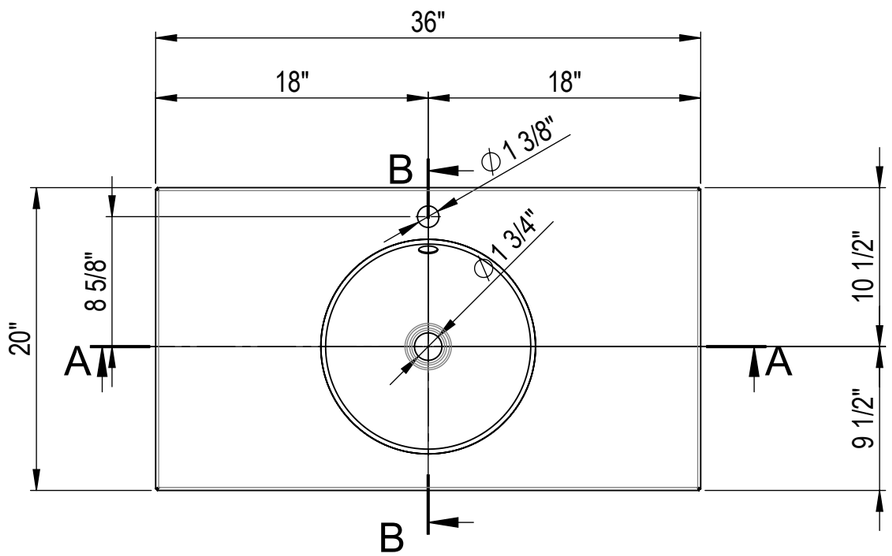

roughing-in

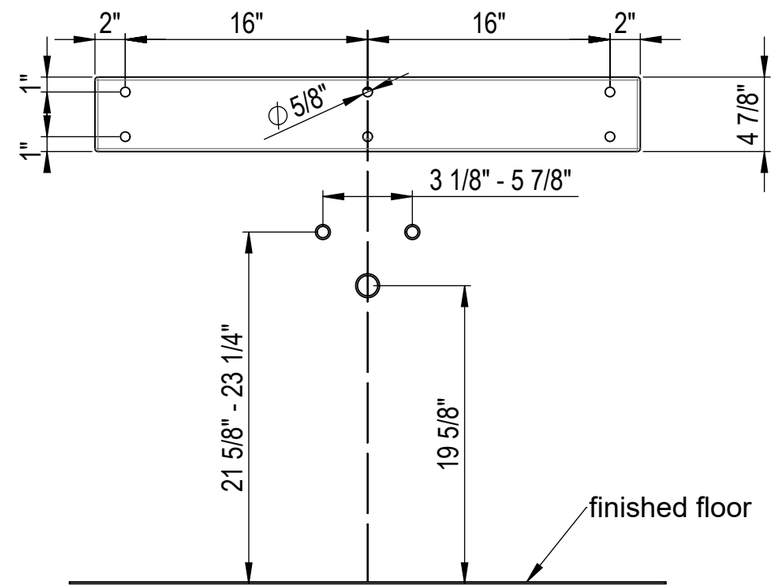

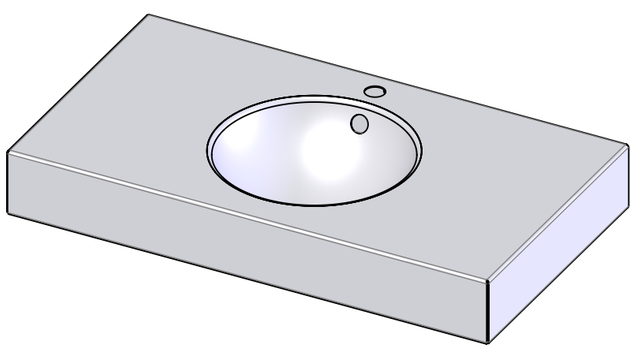

Material:
Glazed titanium steel
All products are made in the same factory with the same processes.
The steel grade and surface materials are identical.

Change	-	-	Change	-	-	replaced by	07.04.2021	LB
	-	-		-	-			-
	-	-		-	-			-
	-	-		-	-			

Item no.	2192-0003	Scale			
release		1:10		Format	Sheet/Sheets
Order no.				A	1 / 1

Schmidlin™
www.schmidlinusa.com

Schmidlin ORBIS
36"x20"x4 7/8" wall-mount, with faucet hole

Drawing no. 01.1.0003007
Version

Plotdatum: 07.04.2021

CAD-System: SolidWorks

We reserves all rights in this document and it's subject matter. The recipient herby acknowledges these rights and assures the use of this document only for the purpose it was delivered. © Wilhelm Schmidlin AG