cut view A-A

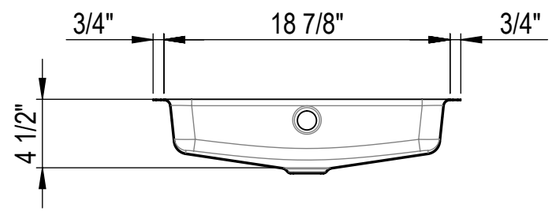

cut view B-B

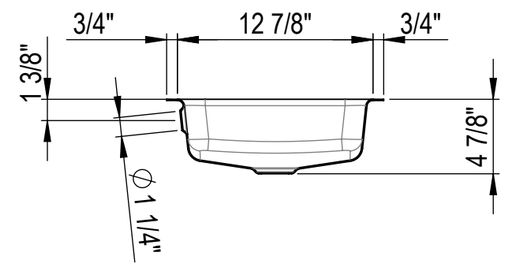

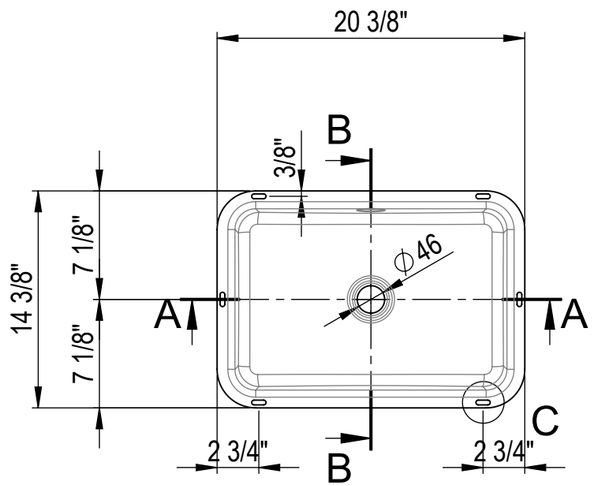

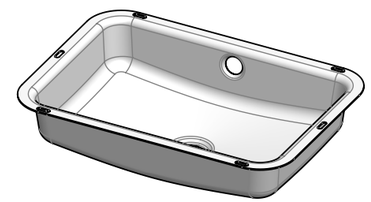

C (1 : 2)

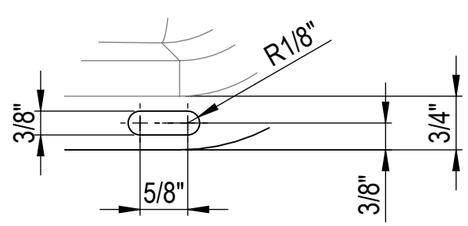

Material:
Glazed titanium steel
All products are made in the same factory with the same processes.
The steel grade and surface materials are identical.

Change				Change						
	a	29.03.2019	LB Rand 18mm		-	-	replaced by	07.11.2018	LB	
	b	08.04.2019	LB Loch,vers		-	-			-	
	c	29.06.2020	LB USA ArtNr		-	-			-	
	-	-			-	-				

Item no.	2285-0002	Scale			
release		1:10		Format	Sheet/Sheets
Order no.				A	3 / 4

Schmidlin™
www.schmidlinusa.com

Schmidlin MERO
undermount 19"x13"

Drawing no. 01.1.0002548 Version C

CAD-System: SolidWorks

Plotdatum: 13.04.2021

We reserves all rights in this document and it's subject matter. The recipient herby acknowledges these rights and assures the use of this document only for the purpose it was delivered. © Wilhelm Schmidlin AG