cut view A-A

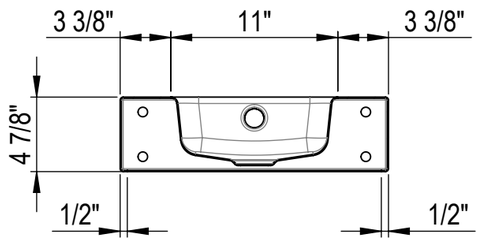

cut view B-B

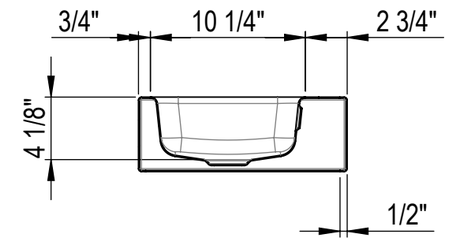

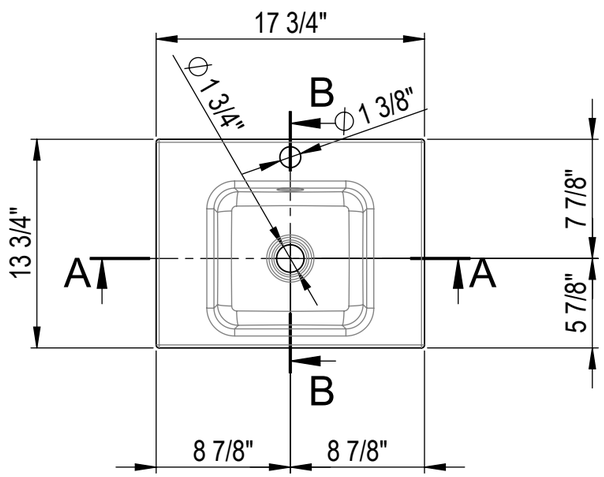

roughing-in

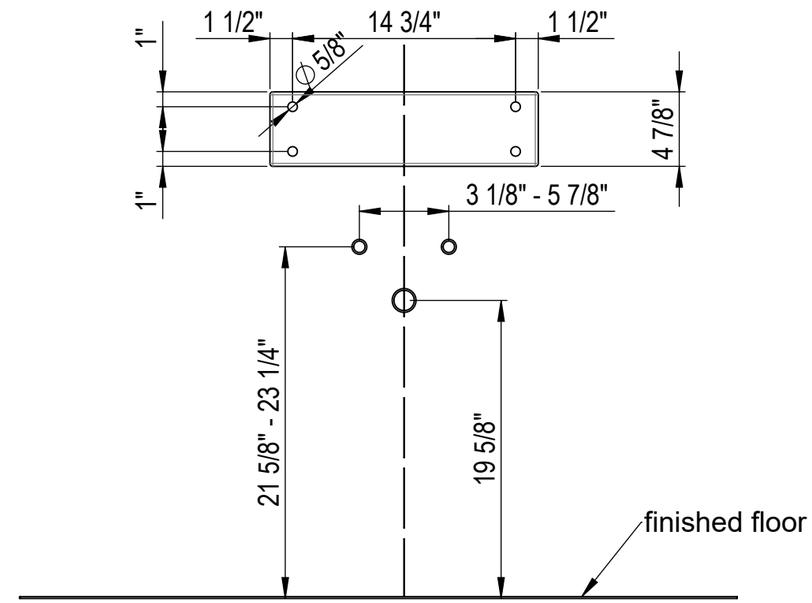

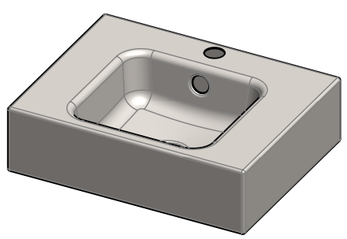

Material:
Glazed titanium steel
All products are made in the same factory with the same processes.
The steel grade and surface materials are identical.

Change	a	04.03.2020 LB ALR 198mm	Change	-	-	replaced by	24.03.2021	LB
	b	25.03.2020 LB Seif55 55		-	-			-
	-	-		-	-			-
	-	-		-	-			

Item no.	2286-0003	Scale			
release		1:10		Format	Sheet/Sheets
Order no.				A	1 / 1

Schmidlin™
www.schmidlinusa.com

Schmidlin MERO MINI
wall-mount 17 3/4"x13 3/4"x4 7/8", faucet hole behind

Drawing no. 01.1.0002495 Version b

CAD-System: SolidWorks

Plotdatum: 24.03.2021

We reserves all rights in this document and it's subject matter. The recipient herby acknowledges these rights and assures the use of this document only for the purpose it was delivered. © Wilhelm Schmidlin AG